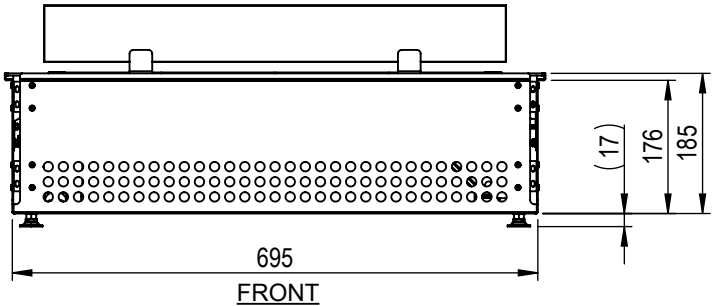

FRONT

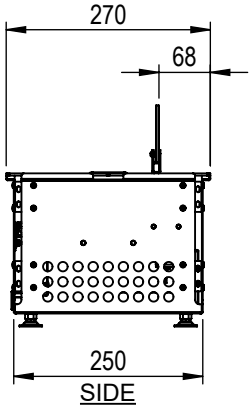

SIDE

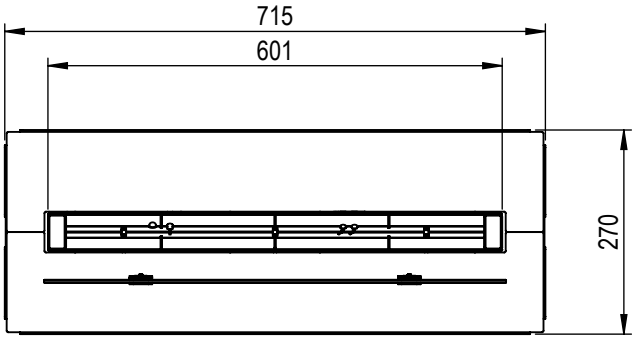

TOP

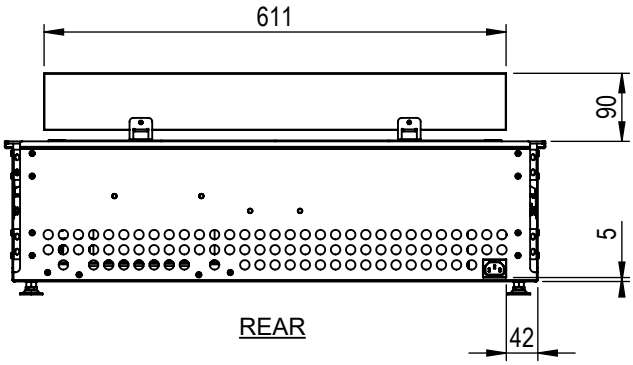
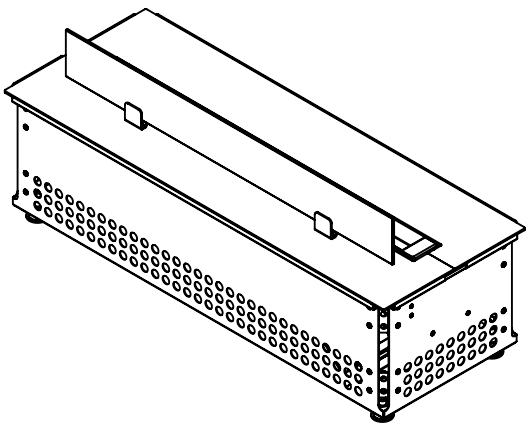
REAR